# Work Order ID 56473

*February 24, 2010 1:03:55 PM*



**Item ID:** D412-664-203 **Accept** **Setup Start** **Stop**

**Revision ID:**

**Item Name:** Crosstube Aft

**Start Date:** 2/24/10 **Start Qty:** 1.00 **Cust Item ID:**

**Required Date:** 3/12/10 **Req'd Qty:** 1.00 **Customer:**

**Reference:**

**Approvals:** **Process Plan:** M **Date:** 10-2-24 **Tooling:** _____ **Date:** _____ **Run Start** **Stop**

**QC:** _____ **Date:** _____ **SPC (Y/N):** _____ **Date:** _____

| Sequence ID/ Work Center ID | Operation Description | Set Up/ Run Hours | Draw Number | Draw Rev. | Plan Code | Accept Qty | Reject Qty | Reject Number | Insp. Stamp |
|---|---|---|---|---|---|---|---|---|---|
| **Draw Nbr** / **Revision Nbr** | | | | | | | | | |
| D412-664-243 / E | | | | | | | | | |
| 100 | | 0.00 | | | | | | | |
| DC | DOCUMENT CONTROL | | | | | | | | |
| Document Control | **Memo** Photocopy bluefile and create labels as per PPP D412-664-203 CHG 006 | 0.00 | | | | | | | |
| 110 | | 0.00 | | | | | | | |
| Packaging | Packaging | | | | | | | | |
| Packaging | **Memo** | 0.00 | | | | | | | |
| 120 | | 0.00 | | | | | | | |
| CNC Bend 2 | BENDING MACHINE - CROSSTUBES | | | | | | | | |
| CNC Alpha 160 Bender | **Memo** Bend tube as per Dwg D412-664-243 using CNC bender program 412-aft and Folio FT010 | 0.00 | | | | | | | |

5/10/04/07

MB 10-03-4

MB 10-03-15

B56473

Dart Aerospace Ltd

| W/O: | | WORK ORDER CHANGES | | | | | |
|---|---|---|---|---|---|---|---|
| DATE | STEP | PROCEDURE CHANGE | By | Date | Qty | Approval Chief Eng / Prod Mgr | Approval QC Inspector |
| | | | | | | | |
| | | | | | | | |

Part No: _____ PAR #: _____ Fault Category: _____ NCR: Yes No DQA: _____ Date: _____

Resolution: _____ Disposition: _____ QA: N/C Closed: _____ Date: _____

| NCR: | | WORK ORDER NON-CONFORMANCE (NCR) | | | | | | |
|---|---|---|---|---|---|---|---|---|
| DATE | STEP | Description of NC Section A | Corrective Action Section B | | | Verification Section C | Approval Chief Eng | Approval QC Inspector |
| | | | Initial Chief Eng | Action Description Chief Eng | Sign & Date | | | |
| | | | | | | | | |
| | | | | | | | | |
| | | | | | | | | |

**NOTE:** Date & initial all entries

H:\fFORMS\Quality Assurance\approved QA\NCRWO RevE

# Work Order ID 56473

*February 24, 2010 1:03:55 PM*



**Item ID:** D412-664-203 **Accept** **Setup Start**

**Revision ID:**

**Item Name:** Crosstube Aft **Stop**

**Start Date:** 2/24/10 **Start Qty:** 1.00 **Cust Item ID:**

**Required Date:** 3/12/10 **Req'd Qty:** 1.00 **Customer:**

**Reference:**

**Approvals:** **Process Plan:** _____ **Date:** _____ **Tooling:** _____ **Date:** _____ **Run Start**

**QC:** _____ **Date:** _____ **SPC (Y/N):** _____ **Date:** _____ **Stop**

| Sequence ID/ Work Center ID | Operation Description | Set Up/ Run Hours | Draw Number | Draw Rev. | Plan Code | Accept Qty | Reject Qty | Reject Number | Insp. Stamp |
|---|---|---|---|---|---|---|---|---|---|
| 130 | QC15- Crosstube Dimensional Check | 0.00 | | | | | | | |
| QC<br>Quality Control | **Memo** | 0.00 | | | | | | | |
| 140 | | 0.00 | | | | | | | |
| Crosstubes<br>Crosstubes | Crosstubes | | | | | | | | |
| | **Memo** | 0.00 | | | | | | | |

10/03/16 / CP 10.03.16

MB 10-03-17

1-Drill pilot holes in tube as per Dwg D412-664-243 using drill Jig DT8550 & DT8551

2-Ream hole to finish size in tube as per Dwg D412-664-243using drill Jig DT8550 & DT8551.Check dimensions between holes, both sides on both cuffs, to ensure alignment with saddle holes.

3-SCRIBE PART # & BATCH #

4-Deburr & Inspect for surface damage. Repair damage within limits as per Dwg D412-664-243

– AWM 10--03-07

Dart Aerospace Ltd

| W/O: | | WORK ORDER CHANGES | | | | | |
|---|---|---|---|---|---|---|---|
| DATE | STEP | PROCEDURE CHANGE | By | Date | Qty | Approval Chief Eng / Prod Mgr | Approval QC Inspector |
| | | | | | | | |
| | | | | | | | |

**Part No:** _____ **PAR #:** _____ **Fault Category:** _____ **NCR:** Yes No **DQA:** _____ **Date:** _____

**Resolution:** _____ **Disposition:** _____ **QA: N/C Closed:** _____ **Date:** _____

| NCR: | | WORK ORDER NON-CONFORMANCE (NCR) | | | | | | |
|---|---|---|---|---|---|---|---|---|
| DATE | STEP | Description of NC Section A | Corrective Action Section B | | | Verification Section C | Approval Chief Eng | Approval QC Inspector |
| | | | Initial Chief Eng | Action Description Chief Eng | Sign & Date | | | |
| | | | | | | | | |
| | | | | | | | | |
| | | | | | | | | |

**NOTE:** Date & initial all entries

H:\fFORMS\Quality Assurance\approved QA\NCRWO RevE

# Work Order ID 56473

*February 24, 2010 1:03:55 PM*



**Item ID:** D412-664-203 **Accept** **Setup Start**

**Revision ID:** **Stop**

**Item Name:** Crosstube Aft

**Start Date:** 2/24/10 **Start Qty:** 1.00 **Cust Item ID:**

**Required Date:** 3/12/10 **Req'd Qty:** 1.00 **Customer:**

**Reference:**

**Run Start**

**Approvals:** **Process Plan:** _____ **Date:** _____ **Tooling:** _____ **Date:** _____

**Stop**

**QC:** _____ **Date:** _____ **SPC (Y/N):** _____ **Date:** _____

| Sequence ID/ Work Center ID | Operation Description | Set Up/ Run Hours | Draw Number | Draw Rev. | Plan Code | Accept Qty | Reject Qty | Reject Number | Insp. Stamp |
|---|---|---|---|---|---|---|---|---|---|
| 150 | Crosstubes Chemical Conversion | 0.00 | | | | | | | |
| HandFXtube | **Memo** | 0.00 | | | | 1 | — | — | AWM10-3-23 |
| Hand Finishing Crosstubes | | | | | | | | | |
| 160 | QC3- Inspect Part Finish | 0.00 | | | | | | | |
| QC | **Memo** | 0.00 | | | | | | | |
| Quality Control | | | | | | | | | |
| 170 | QC5- Inspect part completeness to step on W/O | 0.00 | | | | | | | |
| QC | **Memo** | 0.00 | | | | | | | |
| Quality Control | | | | | | | | | |

Dart Aerospace Ltd

| W/O: | | WORK ORDER CHANGES | | | | | |
|---|---|---|---|---|---|---|---|
| DATE | STEP | PROCEDURE CHANGE | By | Date | Qty | Approval Chief Eng / Prod Mgr | Approval QC Inspector |
| | | | | | | | |
| | | | | | | | |

Part No: _____ PAR #: _____ Fault Category: _____ NCR: Yes No DQA: _____ Date: _____

Resolution: _____ Disposition: _____ QA: N/C Closed: _____ Date: _____

| NCR: | | WORK ORDER NON-CONFORMANCE (NCR) | | | | | | |
|---|---|---|---|---|---|---|---|---|
| DATE | STEP | Description of NC Section A | Corrective Action Section B | | | Verification Section C | Approval Chief Eng | Approval QC Inspector |
| | | | Initial Chief Eng | Action Description Chief Eng | Sign & Date | | | |
| | | | | | | | | |
| | | | | | | | | |
| | | | | | | | | |

**NOTE:** Date & initial all entries

H:\fFORMS\Quality Assurance\approved QA\NCRWO RevE

# Work Order ID 56473

*February 24, 2010 1:03:55 PM*



**Item ID:** D412-664-203 **Accept** **Setup Start** **Stop**

**Revision ID:**

**Item Name:** Crosstube Aft

**Start Date:** 2/24/10 **Start Qty:** 1.00 **Cust Item ID:**

**Required Date:** 3/12/10 **Req'd Qty:** 1.00 **Customer:**

**Reference:**

**Run Start** **Stop**

**Approvals:** **Process Plan:** _____ **Date:** _____ **Tooling:** _____ **Date:** _____

**QC:** _____ **Date:** _____ **SPC (Y/N):** _____ **Date:** _____

| Sequence ID/ Work Center ID | Operation Description | Set Up/ Run Hours | Draw Number | Draw Rev. | Plan Code | Accept Qty | Reject Qty | Reject Number | Insp. Stamp |
|---|---|---|---|---|---|---|---|---|---|
| 180 | Outsource process - NDT per QSI038 4.1 | 0.00 | | | | | | | |
| Outsource2 | **Memo** | 0.00 | | | | CY | 10/3/24 | | (1) |
| Outsource process - NDT | Liquid Penetrant Inspection as per QSI 038Or<br>Issue P/O: 11550 LPI as per ASTM 1417<br>Level 2 Attach copy of NDT results to work order | | | | | | | | |
| 190 | | 0.00 | | | | | | | |
| Packaging | Packaging | | | | | | | | |
| Packaging | **Memo** | 0.00 | | | | | | | |
| Packaging | Inspect for transit damage<br>Ensure copy of NDT results attached to work order. | | | | | | | | |
| 200 | QC5- Inspect part completeness to step on W/O | 0.00 | | | | | | | |
| QC | **Memo** | 0.00 | | | | | | | |
| Quality Control | Inspect for damage & ensure results are as per Dwg D412-664-203 | | | | | | | | |

Dart Aerospace Ltd

| W/O: | | WORK ORDER CHANGES | | | | | |
|---|---|---|---|---|---|---|---|
| DATE | STEP | PROCEDURE CHANGE | By | Date | Qty | Approval Chief Eng / Prod Mgr | Approval QC Inspector |
| | | | | | | | |
| | | | | | | | |

**Part No:** _____ **PAR #:** _____ **Fault Category:** _____ **NCR:** Yes No **DQA:** _____ **Date:** _____

**Resolution:** _____ **Disposition:** _____ **QA: N/C Closed:** _____ **Date:** _____

| NCR: | | WORK ORDER NON-CONFORMANCE (NCR) | | | | | | |
|---|---|---|---|---|---|---|---|---|
| DATE | STEP | Description of NC Section A | Corrective Action Section B | | | Verification Section C | Approval Chief Eng | Approval QC Inspector |
| | | | Initial Chief Eng | Action Description Chief Eng | Sign & Date | | | |
| | | | | | | | | |
| | | | | | | | | |
| | | | | | | | | |

**NOTE:** Date & initial all entries

H:\fFORMS\Quality Assurance\approved QA\NCRWO RevE

# Work Order ID 56473

*February 24, 2010 1:03:55 PM*



**Item ID:** D412-664-203 **Accept** **Setup Start**

**Revision ID:**

**Item Name:** Crosstube Aft **Stop**

**Start Date:** 2/24/10 **Start Qty:** 1.00 **Cust Item ID:**

**Required Date:** 3/12/10 **Req'd Qty:** 1.00 **Customer:**

**Reference:**

**Run Start**

**Approvals:** **Process Plan:** _____ **Date:** _____ **Tooling:** _____ **Date:** _____

**Stop**

**QC:** _____ **Date:** _____ **SPC (Y/N):** _____ **Date:** _____

| Sequence ID/ Work Center ID | Operation Description | Set Up/ Run Hours | Draw Number | Draw Rev. | Plan Code | Accept Qty | Reject Qty | Reject Number | Insp. Stamp |
|---|---|---|---|---|---|---|---|---|---|
| 210 | SprayPaint | 0.00 | | | | | | | |
| SprayPaint | **Memo** | 0.00 | | | | | 10 | 04 | 05 (1) |
| Spray Painting | 1-Prime inside and outside crosstube as per QSI 005 4.2<br>2-Paint outside crosstube with White Imron as per QSI 005 4.2<br>PRIME:<br>Start Time: 9:30<br>Fininsh Time: 10:30<br>PAINT:<br>Start Time: 2:30<br>Finish Time: 3:30 | | | | | | | | |
| 220 | QC14- Inspect Spray Paint | 0.00 | | | | | | | |
| QC | **Memo** | 0.00 | | | | | AT 10-04-04 | | |
| Quality Control | Then,Wrap in plastic bag to protect from scratches | | | | | | | | |

Dart Aerospace Ltd

| W/O: | | WORK ORDER CHANGES | | | | | |
|---|---|---|---|---|---|---|---|
| DATE | STEP | PROCEDURE CHANGE | By | Date | Qty | Approval Chief Eng / Prod Mgr | Approval QC Inspector |
| | | | | | | | |
| | | | | | | | |

Part No: _____ PAR #: _____ Fault Category: _____ NCR: Yes No DQA: _____ Date: _____

Resolution: _____ Disposition: _____ QA: N/C Closed: _____ Date: _____

| NCR: | | WORK ORDER NON-CONFORMANCE (NCR) | | | | | | |
|---|---|---|---|---|---|---|---|---|
| DATE | STEP | Description of NC Section A | Corrective Action Section B | | | Verification Section C | Approval Chief Eng | Approval QC Inspector |
| | | | Initial Chief Eng | Action Description Chief Eng | Sign & Date | | | |
| | | | | | | | | |
| | | | | | | | | |
| | | | | | | | | |

**NOTE:** Date & initial all entries

H:\fFORMS\Quality Assurance\approved QA\NCRWO RevE

# Work Order ID 56473

*February 24, 2010 1:03:55 PM*



**Item ID:** D412-664-203 **Accept** **Setup Start**

**Revision ID:** **Stop**

**Item Name:** Crosstube Aft

**Start Date:** 2/24/10 **Start Qty:** 1.00 **Cust Item ID:**

**Required Date:** 3/12/10 **Req'd Qty:** 1.00 **Customer:**

**Reference:**

**Run Start**

**Approvals:** **Process Plan:** **Date:** **Tooling:** **Date:**

**Stop**

**QC:** **Date:** **SPC (Y/N):** **Date:**

| Sequence ID/ Work Center ID | Operation Description | Set Up/ Run Hours | Draw Number | Draw Rev. | Plan Code | Accept Qty | Reject Qty | Reject Number | Insp. Stamp |
|---|---|---|---|---|---|---|---|---|---|
| 230 | Crosstubes | 0.00 | | | | ml | 10 | 04 | 06 (T) |
| Crosstubes | **Memo** | 0.00 | | | | | | | |
| Crosstubes | Assemble as per Dwg D412-664-203<br><br>1- Lightly scuff the bonded area using a 320 grit sand paper and clean the area with 41058 wash 'n' wipe<br><br>2-Install supports with magnobond as per QSI 015 Adhere for for 12 Hrs<br>A/R 6398 Magnobond Batch: 112417<br>Expiry Date: 01/2011<br><br>3-Install clamps as per Dwg D212-664-203 using installaition jig DT9024 with 0.010 thick brass shims on both chafing sheild (D3189-1). Torque clamps to 80-100 in lb. → ml 10.04.07 | | | | | | | | |
| 240 | QC5- Inspect part completeness to step on W/O | 0.00 | | | | (QC) | | | |
| QC | **Memo** | 0.00 | | | | | | | |
| Quality Control | | | | | | | | | |

Dart Aerospace Ltd

| W/O: | | WORK ORDER CHANGES | | | | | |
|---|---|---|---|---|---|---|---|
| DATE | STEP | PROCEDURE CHANGE | By | Date | Qty | Approval Chief Eng / Prod Mgr | Approval QC Inspector |
| | | | | | | | |
| | | | | | | | |

**Part No:** _____ **PAR #:** _____ **Fault Category:** _____ **NCR:** Yes No **DQA:** _____ **Date:** _____

**Resolution:** _____ **Disposition:** _____ **QA: N/C Closed:** _____ **Date:** _____

| NCR: | | WORK ORDER NON-CONFORMANCE (NCR) | | | | | | |
|---|---|---|---|---|---|---|---|---|
| DATE | STEP | Description of NC Section A | Corrective Action Section B | | | Verification Section C | Approval Chief Eng | Approval QC Inspector |
| | | | Initial Chief Eng | Action Description Chief Eng | Sign & Date | | | |
| | | | | | | | | |
| | | | | | | | | |
| | | | | | | | | |

**NOTE:** Date & initial all entries

H:\fFORMS\Quality Assurance\approved QA\NCRWO RevE

# Work Order ID 56473

*February 24, 2010 1:03:55 PM*



**Item ID:** D412-664-203 **Accept** **Setup Start**

**Revision ID:** **Stop**

**Item Name:** Crosstube Aft

**Start Date:** 2/24/10 **Start Qty:** 1.00 **Cust Item ID:**

**Required Date:** 3/12/10 **Req'd Qty:** 1.00 **Customer:**

**Reference:**

**Run Start**

**Approvals:** **Process Plan:** _____ **Date:** _____ **Tooling:** _____ **Date:** _____

**Stop**

**QC:** _____ **Date:** _____ **SPC (Y/N):** _____ **Date:** _____

| Sequence ID/ Work Center ID | Operation Description | Set Up/ Run Hours | Draw Number | Draw Rev. | Plan Code | Accept Qty | Reject Qty | Reject Number | Insp. Stamp |
|---|---|---|---|---|---|---|---|---|---|
| 250 | Pick Kit | 0.00 | | | | | | | |
| Packaging | **Memo** | 0.00 | | | | | | | |
| Packaging | | | | | | | | | |
| 260 | QC4- 100% Inspect kits for completeness | 0.00 | | | | | | | |
| QC | **Memo** | 0.00 | | | | | | | |
| Quality Control | | | | | | | | | |
| 270 | Packaging | 0.00 | | | | | | | |
| Packaging | **Memo** | 0.00 | | | | | | | |
| Packaging | | | | | | | | | |

Identify and pack for shipping as per PPP D412-664-203
******Ensure tube is not packaged if curing time is less than 12 hrs, see step 27 for application time & date ********
Time & date of packaging: 10/04/07 @ 11:00 AM
Location: _____
NEVA

Dart Aerospace Ltd

| W/O: | | WORK ORDER CHANGES | | | | | |
|---|---|---|---|---|---|---|---|
| DATE | STEP | PROCEDURE CHANGE | By | Date | Qty | Approval Chief Eng / Prod Mgr | Approval QC Inspector |
| | | | | | | | |
| | | | | | | | |

**Part No:** _____ **PAR #:** _____ **Fault Category:** _____ **NCR:** Yes No **DQA:** _____ **Date:** _____

**Resolution:** _____ **Disposition:** _____ **QA: N/C Closed:** _____ **Date:** _____

| NCR: | | WORK ORDER NON-CONFORMANCE (NCR) | | | | | | |
|---|---|---|---|---|---|---|---|---|
| DATE | STEP | Description of NC Section A | Corrective Action Section B | | | Verification Section C | Approval Chief Eng | Approval QC Inspector |
| | | | Initial Chief Eng | Action Description Chief Eng | Sign & Date | | | |
| | | | | | | | | |
| | | | | | | | | |
| | | | | | | | | |

**NOTE:** Date & initial all entries

H:\fFORMS\Quality Assurance\approved QA\NCRWO RevE

# Work Order ID 56473

*February 24, 2010 1:03:55 PM*



**Item ID:** D412-664-203 **Accept** **Setup** **Start**

**Revision ID:**

**Item Name:** Crosstube Aft **Stop**

**Start Date:** 2/24/10 **Start Qty:** 1.00 **Cust Item ID:**

**Required Date:** 3/12/10 **Req'd Qty:** 1.00 **Customer:**

**Reference:**

**Approvals:** **Process Plan:** _____ **Date:** _____ **Tooling:** _____ **Date:** _____ **Run** **Start**

**QC:** _____ **Date:** _____ **SPC (Y/N):** _____ **Date:** _____ **Stop**

| Sequence ID/ Work Center ID | Operation Description | Set Up/ Run Hours | Draw Number | Draw Rev. | Plan Code | Accept Qty | Reject Qty | Reject Number | Insp. Stamp |
|---|---|---|---|---|---|---|---|---|---|
| 280 | QC21- Final Inspection - Work Order Release | 0.00 | | | | | | | |
| QC | **Memo** | 0.00 | | | | | | | |
| Quality Control | | | | | | | | | |

10/04/08

UMF 10-4-7

Dart Aerospace Ltd

| W/O: | | WORK ORDER CHANGES | | | | | |
|---|---|---|---|---|---|---|---|
| DATE | STEP | PROCEDURE CHANGE | By | Date | Qty | Approval Chief Eng / Prod Mgr | Approval QC Inspector |
| | | | | | | | |
| | | | | | | | |

Part No: _____ PAR #: _____ Fault Category: _____ NCR: Yes No DQA: _____ Date: _____

Resolution: _____ Disposition: _____ QA: N/C Closed: _____ Date: _____

| NCR: | | WORK ORDER NON-CONFORMANCE (NCR) | | | | | | |
|---|---|---|---|---|---|---|---|---|
| DATE | STEP | Description of NC Section A | Corrective Action Section B | | | Verification Section C | Approval Chief Eng | Approval QC Inspector |
| | | | Initial Chief Eng | Action Description Chief Eng | Sign & Date | | | |
| | | | | | | | | |
| | | | | | | | | |
| | | | | | | | | |

**NOTE:** Date & initial all entries

H:\fFORMS\Quality Assurance\approved QA\NCRWO RevE

# Picklist Print

*February 24, 2010 1:03:59 PM*



**Work Order ID:** 56473

**Parent Item:** D412-664-203

**Parent Item Name:** Crosstube Aft

**Start Date:** 2/24/10 **Required Date:** 3/12/10

**Start Qty:** 1.00 **Required Qty:** 1.00

**Comments:** IPP Rev:E□04.02.16□Reformat; Added D3189-1□K/DS
IPP Rev:F 06-03-29 Remove Coments on Pick List JLM□
IPP Rev:G 06.12.08 per ECN 886 EC
IPP Rev:H 07-04-30 As per Rev D JLM

| | | | | | | | |
|---|---|---|---|---|---|---|---|
| D412-664-203TRN | Manufactured | No | 110 | Each | 2.0000 | 1.0000 | MB 10-03-11 |

Crosstube Turning Detail

| Warehouse Location | Loc Qty | Loc Code |
|---|---|---|
| Main Warehouse | | |
| FG | 2 | |
| 55723 | 1 | MB 10-03-11 |
| 55724 | 1 | |

| | | | | | | | |
|---|---|---|---|---|---|---|---|
| D2856-600 | Manufactured | No | 230 | f | 439.8575 | 1.7600 | |

Abrasion Strip

| Warehouse Location | Loc Qty | Loc Code |
|---|---|---|
| Main Warehouse | | |
| ST | 439.8575 | |
| 24328 | 6.73 | |
| 25656 | 87.77 | |
| 26650 | 8.23 | |
| 36398 | 122.0675 | |
| 37668 | 215.06 | |

MM 10·04·06

Dart Aerospace Ltd

| W/O: | | WORK ORDER CHANGES | | | | | |
|---|---|---|---|---|---|---|---|
| DATE | STEP | PROCEDURE CHANGE | By | Date | Qty | Approval Chief Eng / Prod Mgr | Approval QC Inspector |
| | | | | | | | |
| | | | | | | | |

**Part No:** _____ **PAR #:** _____ **Fault Category:** _____ **NCR:** Yes No **DQA:** _____ **Date:** _____

**Resolution:** _____ **Disposition:** _____ **QA: N/C Closed:** _____ **Date:** _____

| NCR: | | WORK ORDER NON-CONFORMANCE (NCR) | | | | | | |
|---|---|---|---|---|---|---|---|---|
| DATE | STEP | Description of NC Section A | Corrective Action Section B | | | Verification Section C | Approval Chief Eng | Approval QC Inspector |
| | | | Initial Chief Eng | Action Description Chief Eng | Sign & Date | | | |
| | | | | | | | | |
| | | | | | | | | |
| | | | | | | | | |

**NOTE:** Date & initial all entries

H:\fFORMS\Quality Assurance\approved QA\NCRWO RevE

# Picklist Print

*February 24, 2010 1:03:59 PM*

**Work Order ID:** 56473

**Parent Item:** D412-664-203

**Parent Item Name:** Crosstube Aft

**Start Date:** 2/24/10 **Required Date:** 3/12/10

**Start Qty:** 1.00 **Required Qty:** 1.00

**Comments:** IPP Rev:E□04.02.16□Reformat; Added D3189-1□K/DS
IPP Rev:F 06-03-29 Remove Coments on Pick List JLM□
IPP Rev:G 06.12.08 per ECN 886 EC
IPP Rev:H 07-04-30 As per Rev D JLM

| | | | | | | | |
|---|---|---|---|---|---|---|---|
| D2896-1 | Manufactured | No | 230 | Each | 26.0000 | 1.0000 | |
| Support | | | | | | | |

| Warehouse Location | Loc Qty | Loc Code |
|---|---|---|
| Main Warehouse | | |
| ST | 26 | |
| 43209 | 6 | |
| 47820 | 20 | |

MM 10.04.06

| | | | | | | | |
|---|---|---|---|---|---|---|---|
| D3189-1 | Manufactured | No | 230 | Each | 21.0000 | 2.0000 | |
| Chafing Shield | | | | | | | |

| Warehouse Location | Loc Qty | Loc Code |
|---|---|---|
| OFFSHORE | | |
| FG | 2 | |
| 36065 | 2 | |
| Main Warehouse | | |
| ST | 19 | |
| 47777 | 1 | |
| 52446 | 18 | |

MM 10.04.06

Dart Aerospace Ltd

| W/O: | | WORK ORDER CHANGES | | | | | |
|---|---|---|---|---|---|---|---|
| DATE | STEP | PROCEDURE CHANGE | By | Date | Qty | Approval Chief Eng / Prod Mgr | Approval QC Inspector |
| | | | | | | | |
| | | | | | | | |

Part No: _____ PAR #: _____ Fault Category: _____ NCR: Yes No DQA: _____ Date: _____

Resolution: _____ Disposition: _____ QA: N/C Closed: _____ Date: _____

| NCR: | | WORK ORDER NON-CONFORMANCE (NCR) | | | | | | |
|---|---|---|---|---|---|---|---|---|
| DATE | STEP | Description of NC Section A | Corrective Action Section B | | | Verification Section C | Approval Chief Eng | Approval QC Inspector |
| | | | Initial Chief Eng | Action Description Chief Eng | Sign & Date | | | |
| | | | | | | | | |
| | | | | | | | | |
| | | | | | | | | |

**NOTE:** Date & initial all entries

H:\fFORMS\Quality Assurance\approved QA\NCRWO RevE

# Picklist Print

*February 24, 2010 1:03:59 PM*

**Work Order ID:** 56473

**Parent Item:** D412-664-203

**Parent Item Name:** Crosstube Aft

**Start Date:** 2/24/10 **Required Date:** 3/12/10

**Start Qty:** 1.00 **Required Qty:** 1.00

**Comments:**
IPP Rev:E□04.02.16□Reformat; Added D3189-1□K/DS
IPP Rev:F 06-03-29 Remove Coments on Pick List JLM□
IPP Rev:G 06.12.08 per ECN 886 EC
IPP Rev:H 07-04-30 As per Rev D JLM

| | | | | | | | |
|---|---|---|---|---|---|---|---|
| D3595-063-570 | Manufactured | No | 230 | Each | 60.0000 | 4.0000 | |

RUBBER CUSHION

10.04.06

| Warehouse Location | Loc Qty | Loc Code | |
|---|---|---|---|
| OFFSHORE | | | |
| FG | 4 | | |
| 37971 | 4 | | |
| Main Warehouse | | | |
| ST | 56 | | |
| 45509 | 56 | | |

Dart Aerospace Ltd

| W/O: | | WORK ORDER CHANGES | | | | | |
|---|---|---|---|---|---|---|---|
| DATE | STEP | PROCEDURE CHANGE | By | Date | Qty | Approval Chief Eng / Prod Mgr | Approval QC Inspector |
| | | | | | | | |
| | | | | | | | |

Part No: _____ PAR #: _____ Fault Category: _____ NCR: Yes No DQA: _____ Date: _____

Resolution: _____ Disposition: _____ QA: N/C Closed: _____ Date: _____

| NCR: | | WORK ORDER NON-CONFORMANCE (NCR) | | | | | | |
|---|---|---|---|---|---|---|---|---|
| DATE | STEP | Description of NC Section A | Corrective Action Section B | | | Verification Section C | Approval Chief Eng | Approval QC Inspector |
| | | | Initial Chief Eng | Action Description Chief Eng | Sign & Date | | | |
| | | | | | | | | |
| | | | | | | | | |
| | | | | | | | | |

**NOTE:** Date & initial all entries

H:\fFORMS\Quality Assurance\approved QA\NCRWO RevE

# Picklist Print

*February 24, 2010 1:03:59 PM*

**Work Order ID:** 56473

**Parent Item:** D412-664-203

**Parent Item Name:** Crosstube Aft

**Start Date:** 2/24/10 **Required Date:** 3/12/10

**Start Qty:** 1.00 **Required Qty:** 1.00

**Comments:**
IPP Rev:E□04.02.16□Reformat; Added D3189-1□K/DS
IPP Rev:F 06-03-29 Remove Coments on Pick List JLM□
IPP Rev:G 06.12.08 per ECN 886 EC
IPP Rev:H 07-04-30 As per Rev D JLM

| | | | | | | |
|---|---|---|---|---|---|---|
| MS21920-28 | Purchased | No | 230 | Each | 154.0000 | 4.0000 |

Clamp(per MIL-DTL-8783C)

| Warehouse Location | Loc Qty | Loc Code |
|---|---|---|
| Main Warehouse | | |
| CA | 50 | |
| 113776 | 50 | |
| OFFSHORE | | |
| FG | 5 | |
| 105884 | 5 | |
| Main Warehouse | | |
| ST | 99 | |
| 106864 | 5 | |
| 108466 | 9 | |
| 108847 | 7 | |
| 109181 | 14 | |
| 109965 | 2 | |
| 111281 | 2 | |
| 111734 | 6 | |
| 112624 | 4 | |
| 112863 | 50 | |

nl 10-04-06

Dart Aerospace Ltd

| W/O: | | WORK ORDER CHANGES | | | | | |
|---|---|---|---|---|---|---|---|
| DATE | STEP | PROCEDURE CHANGE | By | Date | Qty | Approval Chief Eng /. Prod Mgr | Approval QC Inspector |
| | | | | | | | |
| | | | | | | | |

Part No: _____ PAR #: _____ Fault Category: _____ NCR: Yes No DQA: _____ Date: _____

Resolution: _____ Disposition: _____ QA: N/C Closed: _____ Date: _____

| NCR: | | WORK ORDER NON-CONFORMANCE (NCR) | | | | | | |
|---|---|---|---|---|---|---|---|---|
| DATE | STEP | Description of NC Section A | Corrective Action Section B | | | Verification Section C | Approval Chief Eng | Approval QC Inspector |
| | | | Initial Chief Eng | Action Description Chief Eng | Sign & Date | | | |
| | | | | | | | | |
| | | | | | | | | |
| | | | | | | | | |

**NOTE:** Date & initial all entries

H:\fFORMS\Quality Assurance\approved QA\NCRWO RevE

# Picklist Print

*February 24, 2010 1:03:59 PM*

**Work Order ID:** 56473

**Parent Item:** D412-664-203

**Parent Item Name:** Crosstube Aft

**Start Date:** 2/24/10 **Required Date:** 3/12/10

**Start Qty:** 1.00 **Required Qty:** 1.00

**Comments:**
IPP Rev:E□04.02.16□Reformat; Added D3189-1□K/DS
IPP Rev:F 06-03-29 Remove Coments on Pick List JLM□
IPP Rev:G 06.12.08 per ECN 886 EC
IPP Rev:H 07-04-30 As per Rev D JLM

| | | | | | | | |
|---|---|---|---|---|---|---|---|
| MS21920-30 | Purchased | No | | 230 | Each | 139.0000 | 2.0000 |

clamp(per MIL-DTL-8783C)

| Warehouse Location | Loc Qty | Loc Code |
|---|---|---|
| Main Warehouse | | |
| ST | 139 | |
| 107600 | 3 | |
| 109181 | 36 | |
| 111258 | 50 | |
| 112772 | 50 | |

m 10.04.06

| | | | | | | | |
|---|---|---|---|---|---|---|---|
| AN6-40A | Purchased | No | | 250 | Each | 106.0000 | 4.0000 |

8 Bolt

| Warehouse Location | Loc Qty | Loc Code |
|---|---|---|
| Main Warehouse | | |
| ST | 106 | |
| 112612 | 1 | |
| 112679 | 5 | |
| 112828 | 50 | |
| 113422 | 50 | M113422 |

1/4/7 (1)

Dart Aerospace Ltd

| W/O: | | WORK ORDER CHANGES | | | | | |
|---|---|---|---|---|---|---|---|
| DATE | STEP | PROCEDURE CHANGE | By | Date | Qty | Approval Chief Eng /. Prod Mgr | Approval QC Inspector |
| | | | | | | | |
| | | | | | | | |

Part No: _____ PAR #: _____ Fault Category: _____ NCR: Yes No DQA: _____ Date: _____

Resolution: _____ Disposition: _____ QA: N/C Closed: _____ Date: _____

| NCR: | | WORK ORDER NON-CONFORMANCE (NCR) | | | | | | |
|---|---|---|---|---|---|---|---|---|
| DATE | STEP | Description of NC Section A | Corrective Action Section B | | | Verification Section C | Approval Chief Eng | Approval QC Inspector |
| | | | Initial Chief Eng | Action Description Chief Eng | Sign & Date | | | |
| | | | | | | | | |
| | | | | | | | | |
| | | | | | | | | |

**NOTE:** Date & initial all entries

H:\fFORMS\Quality Assurance\approved QA\NCRWO RevE

# Picklist Print

*February 24, 2010 1:03:59 PM*

**Work Order ID:** 56473

**Parent Item:** D412-664-203

**Parent Item Name:** Crosstube Aft

**Start Date:** 2/24/10 **Required Date:** 3/12/10

**Start Qty:** 1.00 **Required Qty:** 1.00

**Comments:** IPP Rev:E□04.02.16□Reformat; Added D3189-1□K/DS
IPP Rev:F 06-03-29 Remove Coments on Pick List JLM□
IPP Rev:G 06.12.08 per ECN 886 EC
IPP Rev:H 07-04-30 As per Rev D JLM

| | | | | | | | |
|---|---|---|---|---|---|---|---|
| AN6-41A<br>Bolt | Purchased | No | | 250 | Each | 94.0000 | 2.0000 |

| Warehouse Location | Loc Qty | Loc Code |
|---|---|---|
| Main Warehouse | | |
| ST | 94 | |
| 112489 | 19 | M112489 |
| 112805 | 25 | |
| 113288 | 50 | |

| | | | | | | | |
|---|---|---|---|---|---|---|---|
| AN960JD616<br>Washer | Purchased | No | | 250 | Each | 397.0000 | 18.0000 |

| Warehouse Location | Loc Qty | Loc Code |
|---|---|---|
| Main Warehouse | | |
| ST | 397 | |
| 112314 | 3 | |
| 112828 | 94 | |
| 113149 | 300 | M113149 |

Dart Aerospace Ltd

| W/O: | | WORK ORDER CHANGES | | | | | |
|---|---|---|---|---|---|---|---|
| DATE | STEP | PROCEDURE CHANGE | By | Date | Qty | Approval Chief Eng / Prod Mgr | Approval QC Inspector |
| | | | | | | | |
| | | | | | | | |

Part No: _____ PAR #: _____ Fault Category: _____ NCR: Yes No DQA: _____ Date: _____

Resolution: _____ Disposition: _____ QA: N/C Closed: _____ Date: _____

| NCR: | | WORK ORDER NON-CONFORMANCE (NCR) | | | | | | |
|---|---|---|---|---|---|---|---|---|
| DATE | STEP | Description of NC Section A | Corrective Action Section B | | | Verification Section C | Approval Chief Eng | Approval QC Inspector |
| | | | Initial Chief Eng | Action Description Chief Eng | Sign & Date | | | |
| | | | | | | | | |
| | | | | | | | | |
| | | | | | | | | |

**NOTE:** Date & initial all entries

H:\fFORMS\Quality Assurance\approved QA\NCRWO RevE

# Picklist Print

*February 24, 2010 1:03:59 PM*

**Work Order ID:** 56473

**Parent Item:** D412-664-203

**Parent Item Name:** Crosstube Aft

**Start Date:** 2/24/10 **Required Date:** 3/12/10

**Start Qty:** 1.00 **Required Qty:** 1.00

**Comments:** IPP Rev:E□04.02.16□Reformat; Added D3189-1□K/DS
IPP Rev:F 06-03-29 Remove Coments on Pick List JLM□
IPP Rev:G 06.12.08 per ECN 886 EC
IPP Rev:H 07-04-30 As per Rev D JLM

| | | | | | | | |
|---|---|---|---|---|---|---|---|
| MS21042L6 | Purchased | No | 250 | Each | 376.0000 | 6.0000 | 4 |
| Nut | | | | | | | |

| Warehouse Location | Loc Qty | Loc Code |
|---|---|---|
| Main Warehouse | | |
| ST | 376 | |
| 105077 | 22 | |
| 110002 | 5 | |
| 111578 | 349 | 111578 |

Dart Aerospace Ltd

| W/O: | | WORK ORDER CHANGES | | | | | |
|---|---|---|---|---|---|---|---|
| DATE | STEP | PROCEDURE CHANGE | By | Date | Qty | Approval Chief Eng / Prod Mgr | Approval QC Inspector |
| | | | | | | | |
| | | | | | | | |

Part No: _____ PAR #: _____ Fault Category: _____ NCR: Yes No DQA: _____ Date: _____

Resolution: _____ Disposition: _____ QA: N/C Closed: _____ Date: _____

| NCR: | | WORK ORDER NON-CONFORMANCE (NCR) | | | | | | |
|---|---|---|---|---|---|---|---|---|
| DATE | STEP | Description of NC Section A | Corrective Action Section B | | | Verification Section C | Approval Chief Eng | Approval QC Inspector |
| | | | Initial Chief Eng | Action Description Chief Eng | Sign & Date | | | |
| | | | | | | | | |
| | | | | | | | | |
| | | | | | | | | |

**NOTE:** Date & initial all entries

H:\fFORMS\Quality Assurance\approved QA\NCRWO RevE

| DART AEROSPACE LTD | Work Order: | 56473 |
|---|---|---|
| | | |
| **Description:** Crosstube High Aft (412) | Part Number: | D412-664-203 |
| | | |
| **Inspection Dwg:** D412-664-243 **Rev:** E | | Page 1 of 1 |

| Required Dimension | Min | Max |
|---|---|---|
| Height | 24.24 | 24.50 |
| 1/2 Span | 53.59 | 53.85 |
| Angle | 49 | 52 |
| Total Span | 107.18 | 107.70 |

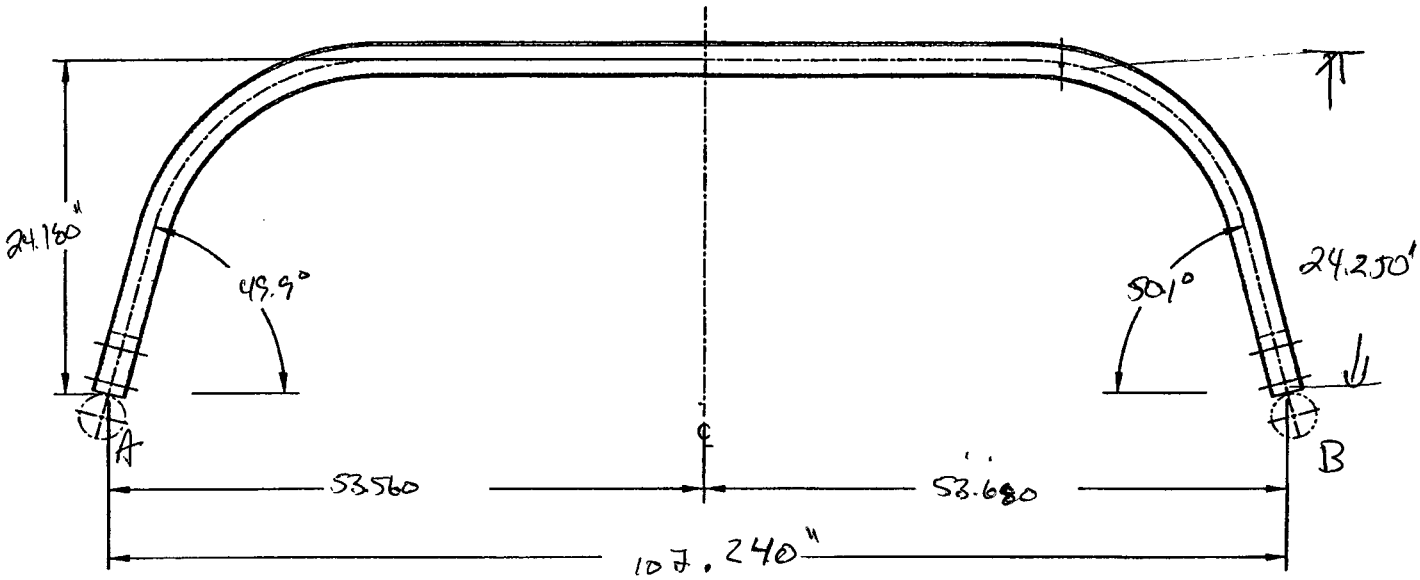


| Comments |
|---|
| One height is low. Acceptable CP 10.03.16 |
| |
| |

| | |
|---|---|
| QC15 Inspection | S |
| Date | 10/03/16 |

| Rev | Date | Change | Revised by | Approved |
|---|---|---|---|---|
| A | 07.02.06 | New Issue | KJ/JM | |
| B | 07.05.08 | Dimensions updated per Dwg rev. D | KJ/JLM | |
| C | 10.02.02 | Dwg Rev updated | KJ | |

| Item | Qty -243 | Part Number | Description |
|---|---|---|---|
| 1 | X | D412-664-243 | CROSSTUBE ASSEMBLY (412 HIGH AFT) |
| 2 | 1 | D6009-129 | CROSSTUBE |
| 3 | 2 | D3595-063-570 | RUBBER CUSHION |
| 4 | 1 | D2896-1 | SUPPORT |
| 5 | 2 | D3189-1 | CHAFING SHIELD |
| 6 | 2 | D2856-600-1009 | ABRASION STRIP |
| 7 | 4 | MS21920-28 | CLAMP |
| 8 | 2 | MS21920-30 | CLAMP (OR MS21920-32) |
| 9 | A/R | MAGNOBOND 6398 | ROCKWELL SPECIFICATION RBO-120-023 ADHESIVE (TEXTRON/BELL SPEC. 299-947-100, TYPE II, CLASS 2 ADHESIVE) |

SHOP COPY
RETURN TO
ENGINEERING
UNCONTROLLED COPY
SUBJECT TO AMENDMENT
WITHOUT NOTICE
WORK ORDER
NO. 56423
BJ 10-2-24

**GENERAL NOTES:**

1) MATERIAL: MANUFACTURED FROM D6009-129
   FINISHED LENGTH = 124.100±0.020 (BEFORE BENDING/TRIMMING)
2) FINISH: CHEMICAL CONVERSION COAT PER DART QSI 005 4.1
   PRIME INSIDE AND OUTSIDE PER DART QSI 005 4.2
   PAINT OUTSIDE PER DART QSI 005 4.2
3) TOLERANCES ARE PER DART QSI 018 UNLESS OTHERWISE NOTED.
4) UNITS: INCHES UNLESS OTHERWISE NOTED.
5) BREAK SHARP EDGES: 0.005 TO 0.010 MAX.
6) IDENTIFICATION: SCRIBE DART PART NUMBER "D412-664-243" AND BATCH NUMBER ON INSIDE OF CUFF USING VIBRATING STYLUS.
7) WEIGHT: 47.0 lbs (PER IIN-D212-664)
8) PART IS SYMMETRIC ABOUT CENTERLINE.
9) RUN CUTTER OFF PART. BLEND OUT EDGE LONGITUDINALY, TRANSITION SHOULD BE SMOOTH.
10) BEND PROGRESSIVELY WITH A MINIMUM OF 8 PASSES. MAXIMUM TUBE FLATTENING DUE TO BENDING IS 6% BASED ON O.D.
11) LIQUID PENETRANT INSPECT OUTSIDE SURFACE OF CROSSTUBE PER QSI 038.
12) INSTALL D2896-1 SUPPORT USING 0.03" TO 0.06" THICK LAYER OF MAGNOBOND 6398 TO THE SURFACE OF D2896-1 THAT WILL BE IN CONTACT WITH THE CROSSTUBE PER QSI 015. LET CURE FOR 12 HOURS AFTER INSTALLATION AND PRIOR TO PACKAGING.
13) INSTALL MS21920-30 CLAMPS (OR -32) WITH D3595-063-570 RUBBER CUSHIONS TO SECURE THE D2896-1 SUPPORT ON TOP SIDE OF THE CROSSTUBE. ENSURE CLAMPS ARE OPPOSITE OF CROSSTUBE SUPPORT.
14) INSTALL D2856-600-1009 ABRASION STRIPS WITH A 0.13 REF GAP ON BOTTOM SIDE OF CROSSTUBE PER QSI 035.
15) EXTREME CARE MUST BE TAKEN TO PROTECT THE OUTSIDE SURFACE OF THE TUBE. THE OUTSIDE SURFACE MUST BE SMOOTH AND FREE FROM SURFACE DEFECTS SUCH AS SCRATCHES, NICKS, OR DENTS. DEFECTS UP TO 0.005" MAY BE BLENDED OUT LONGITUDINALLY. CIRCUMFERENTIAL GRIND MARKS ARE UNACCEPTABLE.
16) TORQUE CLAMPS 80 TO 100 IN-LB. ENSURE AT LEAST 1.5 THREADS SHOWING IN SAFETY AND THAT NUT HAS NOT BOTTOMED-OUT AFTER TORQUING.

RELEASED
2009 -10- 29

| REV. | DESCRIPTION | BY | DATE |
|---|---|---|---|
| E | REFORMAT/REVISE GENERAL NOTES; REORGANIZED VIEWS AND REFORMATTED DRAWING TO CURRENT STANDARDS; RELOCATED FLAG #6 PER PAR 08-046 (ZN A6-3); ADD TOLERANCE (ZN B6-3, C4-3, C8-3 & C5-3); MOVED TURNING DETAIL & UPDATED TOLERANCE TO SHEET 4. | RF | 09.09.30 |
| D | REMOVE D2732-058, CHANGE TO D3595-063-570 | PH | 07.03.09 |
| C | REMOVE D2856-600-1087, ADD D2732-058 & MAGNOBOND 6398, MS21920-32 WAS MS21920-30 | MB | 06.10.27 |
| B | ADD HOLES FOR COMPATABILITY WITH BHT/AA SKIDTUBES | PH | 05.02.04 |
| A | NEW ISSUE | PH | 01.10.17 |

| | | | |
|---|---|---|---|
| DESIGN | PH | DART AEROSPACE LTD<br>HAWKESBURY, ONTARIO, CANADA | |
| DRAWN | RF | | |
| CHECKED | | DRAWING NO. | REV. E |
| MFG. APPR. | | D412-664-243 | SHEET 1 OF 4 |
| APPROVED | | TITLE | SCALE |
| DE APPR. | | CROSSTUBE ASSEMBLY (412 HI AFT) | NTS |
| DATE | 09.09.30 | | |

COPYRIGHT © 2001 BY DART AEROSPACE LTD
THIS DOCUMENT IS PRIVATE AND CONFIDENTIAL AND IS SUPPLIED ON THE EXPRESS CONDITION THAT IT IS NOT TO BE USED FOR ANY PURPOSE OR COPIED OR COMMUNICATED TO ANY OTHER PERSON WITHOUT WRITTEN PERMISSION FROM DART AEROSPACE LTD.

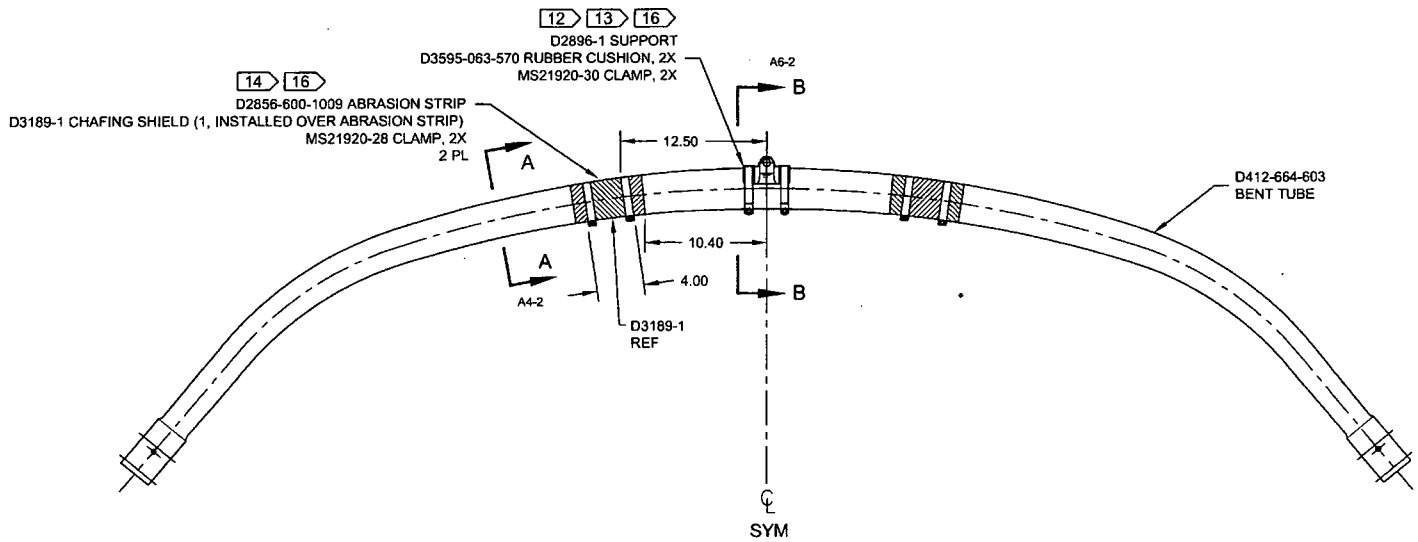


**D212-664-243**
**ASSEMBLY DETAIL** E

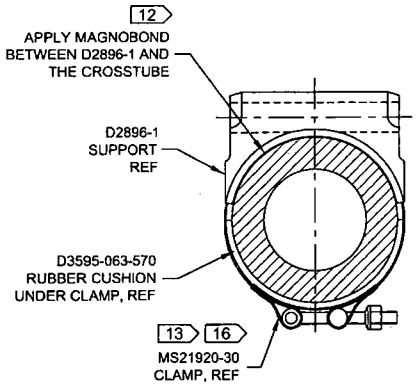


**SECTION B-B** D4-2
SCALE 4X

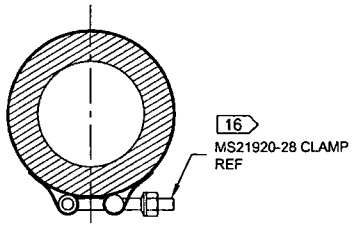


**SECTION A-A** C6-2
SCALE 4X

w/O 56423

RELEASED
2009 -10- 29
MP

| | | |
|---|---|---|
| DESIGN | PH | **DART AEROSPACE LTD** HAWKESBURY, ONTARIO, CANADA |
| DRAWN | RF | |
| CHECKED | | DRAWING NO. REV. E |
| MFG. APPR. | | D412-664-243 SHEET 2 OF 4 |
| APPROVED | | TITLE SCALE |
| DE APPR. | | CROSSTUBE ASSEMBLY (412 HI AFT) NTS |
| DATE | 09.09.30 | |

COPYRIGHT © 2001 BY DART AEROSPACE LTD
THIS DOCUMENT IS PRIVATE AND CONFIDENTIAL AND IS SUPPLIED ON THE EXPRESS CONDITION THAT IT IS NOT TO BE USED FOR ANY PURPOSE OR COPIED OR COMMUNICATED TO ANY OTHER PERSON WITHOUT WRITTEN PERMISSION FROM DART AEROSPACE LTD.

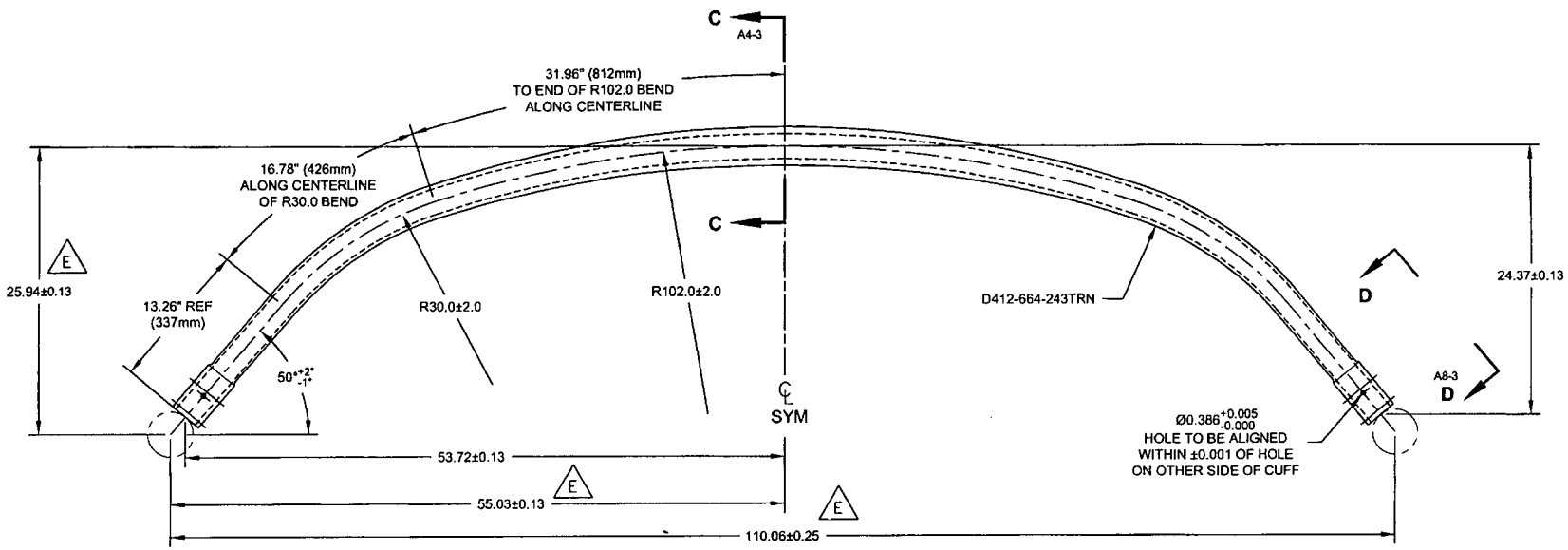


**D412-664-603** 10
**BENDING AND DRILLING DETAIL** E

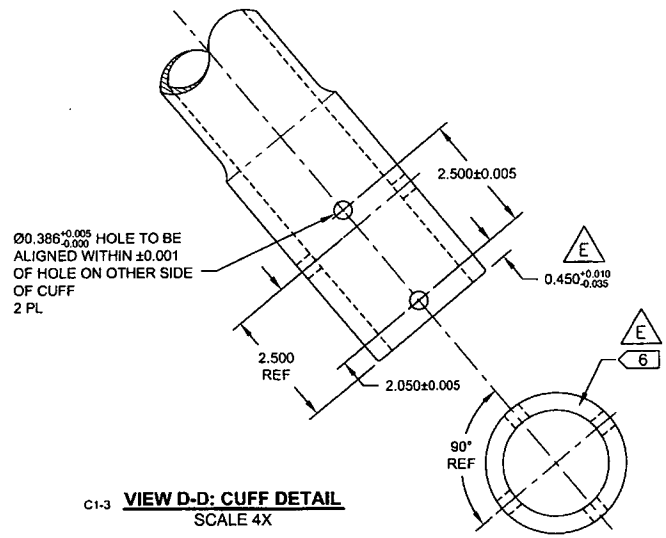


C1-3 **VIEW D-D: CUFF DETAIL**
SCALE 4X

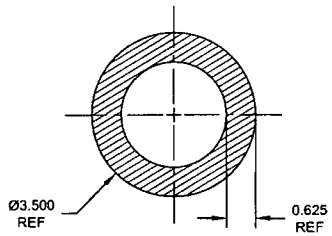


**SECTION C-C** D5-3
SCALE 4X

w/o 56473

RELEASED
2009 -10- 29
MP

| | | | |
|---|---|---|---|
| DESIGN | PH | **DART AEROSPACE LTD** HAWKESBURY, ONTARIO, CANADA | |
| DRAWN | RF | | |
| CHECKED | | DRAWING NO. | REV. E |
| MFG. APPR. | | D412-664-243 | SHEET 3 OF 4 |
| APPROVED | | TITLE | SCALE |
| DE APPR. | | CROSSTUBE ASSEMBLY (412 HI AFT) | NTS |
| DATE | 09.09.30 | | |

COPYRIGHT © 2001 BY DART AEROSPACE LTD
THIS DOCUMENT IS PRIVATE AND CONFIDENTIAL AND IS SUPPLIED ON THE EXPRESS CONDITION THAT IT IS NOT TO BE USED FOR ANY PURPOSE OR COPIED OR COMMUNICATED TO ANY OTHER PERSON WITHOUT WRITTEN PERMISSION FROM DART AEROSPACE LTD.

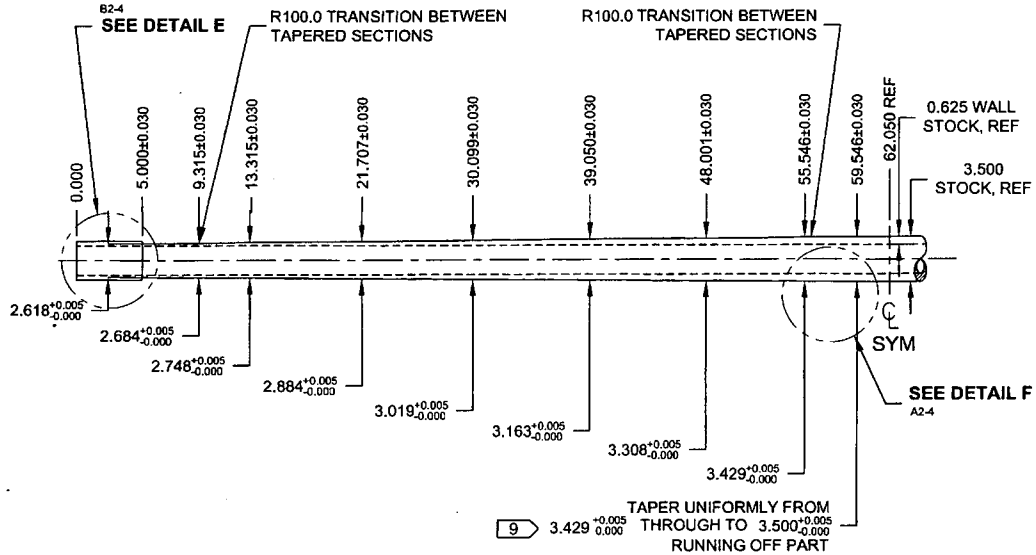


**D412-664-243TRN**
**TURNING DETAIL** E

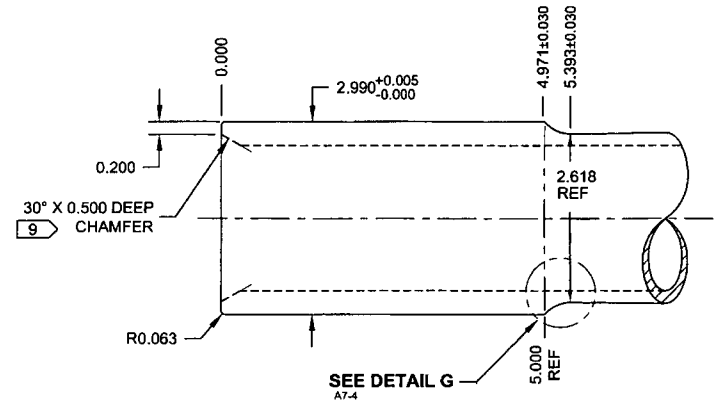


**DETAIL E:**
**CROSSTUBE CUFF** D8-4
SCALE 5X

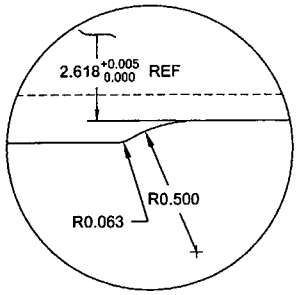


**DETAIL G:**
**CUFF TRANSITION** C2-4
SCALE 10X

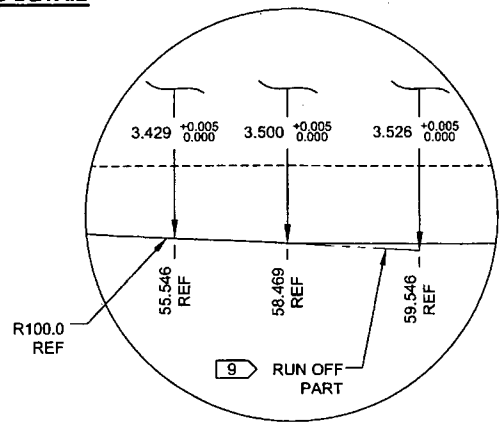


**DETAIL F:**
**TAPER RUN-OFF** C4-4
NOT TO SCALE

W/056423

RELEASED
2009 -10- 29

| | | |
|---|---|---|
| DESIGN | PH | **DART AEROSPACE LTD** HAWKESBURY, ONTARIO, CANADA |
| DRAWN | RF | |
| CHECKED | | DRAWING NO. D412-664-243 — REV. E — SHEET 4 OF 4 |
| MFG. APPR. | | |
| APPROVED | | TITLE: CROSSTUBE ASSEMBLY (412 HI AFT) — SCALE: NTS |
| DE APPR. | | |
| DATE | 09.09.30 | |

COPYRIGHT © 2001 BY DART AEROSPACE LTD
THIS DOCUMENT IS PRIVATE AND CONFIDENTIAL AND IS SUPPLIED ON THE EXPRESS CONDITION THAT IT IS NOT TO BE USED FOR ANY PURPOSE OR COPIED OR COMMUNICATED TO ANY OTHER PERSON WITHOUT WRITTEN PERMISSION FROM DART AEROSPACE LTD.

S

REFERENCE ONLY

## 5.0 PARTS LIST

### 5.1 HIGH GEAR CROSSTUBES

| Item | -101 | -201 | -203 | Part Number | Description |
|---|---|---|---|---|---|
| | X | | | **D212-664-101** | **CROSSTUBE INSTALLATION, 204/205/210/212/214/412, UH-1H, UH-1A/B/E/F/L/P, TH-1F/L, HH-1K HIGH FWD** |
| | | X | | **D212-664-201** | **CROSSTUBE INSTALLATION, 204/205/210/212/214, UH-1H, UH-1A/B/E/F/L/P, TH-1F/L, HH-1K HIGH AFT** |
| | | | X | **D412-664-203** | **CROSSTUBE INSTALLATION, 412 HIGH AFT** |
| | | | | | |
| 1 | 1 | | | D212-664-141 | CROSSTUBE ASSEMBLY, 204/205/210/212/214/412, UH-1H, UH-1A/B/E/F/L/P, TH-1F/L, HH-1K HIGH FWD |
| 2 | | 1 | | D212-664-241 | CROSSTUBE ASSEMBLY, 204/205/210/212/214, UH-1H, UH-1A/B/E/F/L/P, TH-1F/L, HH-1K HIGH AFT |
| 3 | | | 1 | D412-664-243 | CROSSTUBE ASSEMBLY, 412 HIGH AFT |
| | | | | | |
| 10 | 2 | | | * D2893-1 | SUPPORT |
| 11 | 4 | | | * D3595-063-450 | RUBBER CUSHION |
| 12 | 4 | | | * MS21920-25 | CLAMP (OR MS21042-26) |
| 13 | 4 | | | AN6-35A | BOLT |
| 14 | 4 | | | AN6-36A | BOLT |
| 15 | 6 | | | MS21042L6 | NUT (OR MS21042-6) |
| 16 | 18 | | | AN960JD616 | WASHER |
| | | | | | |
| 20 | | 2 | | * D2940-1 | SUPPORT |
| 21 | | 4 | | * D3595-063-530 | RUBBER CUSHION |
| 22 | | 4 | | * MS21920-28 | CLAMP (OR MS21042-30) |
| 23 | | 4 | | AN6-40A | BOLT |
| 24 | | 2 | | AN6-41A | BOLT |
| 25 | | 6 | | MS21042L6 | NUT (OR MS21042-6) |
| 26 | | 18 | | AN960JD616 | WASHER |
| | | | | | |
| 30 | | | 1 | * D2896-1 | SUPPORT |
| 31 | | | 2 | * D2856-600-1009 | ABRASION STRIP |
| 32 | | | 2 | * D3595-063-570 | RUBBER CUSHION |
| 33 | | | 4 | * MS21920-28 | CLAMP |
| 34 | | | 2 | * MS21920-30 | CLAMP (OR MS21042-32) |
| 35 | | | 4 | AN6-40A | BOLT |
| 36 | | | 2 | AN6-41A | BOLT |
| 37 | | | 6 | MS21042L6 | NUT (OR MS21042-6) |
| 38 | | | 18 | AN960JD616 | WASHER |
| 39 | | | 2 | * D3189-1 | CHAFING SHIELD |
| | | | | | |
| 50 | 1 | 1 | | D3428-1 | PLACARD |

*REFERENCE ONLY. PARTS ARE INCLUDED IN D212-664-141/-241 OR D412-664-243 ASSEMBLIES ABOVE
NOTE: KITS INCLUDE EXTRA HARDWARE FOR COMPATIBILITY WITH BOTH DART AND BELL/AA SKIDTUBES.

• COPYRIGHT © 2001 BY DART AEROSPACE LTD •
THIS DOCUMENT IS PRIVATE AND CONFIDENTIAL AND IS SUPPLIED ON THE EXPRESS CONDITION THAT IT IS NOT TO BE USED FOR ANY PURPOSE OR COPIED OR COMMUNICATED TO ANY OTHER PERSON WITHOUT WRITTEN PERMISSION FROM DART AEROSPACE LTD.

Dart Aerospace Ltd

| W/O: | | WORK ORDER CHANGES | | | | | |
|---|---|---|---|---|---|---|---|
| DATE | STEP | PROCEDURE CHANGE | By | Date | Qty | Approval Chief Eng / Prod Mgr | Approval QC Inspector |
| | | | | | | | |
| | | | | | | | |

**Part No:** _____ **PAR #:** _____ **Fault Category:** _____ **NCR:** Yes No **DQA:** _____ **Date:** _____

**Resolution:** _____ **Disposition:** _____ **QA: N/C Closed:** _____ **Date:** _____

| NCR: | | WORK ORDER NON-CONFORMANCE (NCR) | | | | | | |
|---|---|---|---|---|---|---|---|---|
| DATE | STEP | Description of NC Section A | Corrective Action Section B | | | Verification Section C | Approval Chief Eng | Approval QC Inspector |
| | | | Initial Chief Eng | Action Description Chief Eng | Sign & Date | | | |
| | | | | | | | | |
| | | | | | | | | |
| | | | | | | | | |

**NOTE:** Date & initial all entries

ACUREN

# LIQUID PENETRANT TEST REPORT

P- 1532

PAGE 1 OF

CLIENT: DART AEROSPACE
ATTENTION: LINDA / CHANTEL
ADDRESS: 1270 ABERDEEN ST. HAWKESBURY ON, K6H 1K7

DATE: March 26-2010
TIME: AM ☑ P
ACUREN JOB NO.: 188-10-0715
PO/WO NO.: 115507
WORK LOCATION: SHOP
ACCEPTANCE STD.: ASTM 1417 REV./DATE: 200

PROJECT: F.P.I. ON CROSS TUBES
ITEM(S) EXAMINED: 6 PCS

## JOB DESCRIPTION

PROCEDURE NO. LT-0007 REV./DATE
TECHNIQUE NO. LT-1GH2 REV./DATE
PART NO.: —
MATERIAL: ALUMINE ALUMINUM THICKNESS: —
SCOPE: WET FLOURESCENT LIQUID PENETRANT INSPECTION CARRIED OUT 100% EXTERNAL

## TEST DETAILS

METHOD: ☑ FLUORESCENT ☐ VISIBLE
FAMILY BRAND: MAGNAFLUX
PENETRANT: 2L67 MINIMUM DWELL TIME: 45/10 MIN.
PENETRANT REMOVER: H2O MINIMUM DRY TIME: >10 MIN.
DEVELOPER: SKD 52 MINIMUM DWELL TIME: 10 MIN.
DEVELOPER TYPE: ☑ NON AQUEOUS ☐ AQUEOUS ☐ DRY

☑ WATER WASH ☐ SOLVENT REMOVABLE ☐ POST EMUL
BLACK LIGHT S/N: 16459 ☐ OUTPUT > 1000 μ W/CM² ☐ AMBIENT <
LIGHTING EQUIP. ☐ FLASHLIGHT ☐ TROUBLELIGHT ☐ OUTPUT>100 fc @ SU
OTHER: LABINO
LIGHT METER S/N: 1098866 CAL DUE DATE: MAY-7-20

## TEST SURFACE

SURFACE CONDITION: ☐ AS GROUND ☐ AS WELDED ☑ MACHINED ☐ SHOT BLASTED ☐ CLEAN BARE META
SURFACE TEMPERATURE: ☐ < - 4°C/ 20°F ☐ - 4°C/ 20°F TO 10°C/50°F ☑ 10°C/50°F TO 52°C/125°F ☐ > 52°C/125°F

## RESULTS- (☐ METRIC ☐ IMPERIAL)

| | | |
|---|---|---|
| 1 | CROSSTUBE, W.O. 56473 | ✓ |
| 1 | CROSSTUBE, W.O. 56475 | ✓ |
| 1 | CROSSTUBE, W.O. 56504 | ✓ |
| 1 | CROSSTUBE, W.O. 56505 | ✓ |
| 1 | CROSSTUBE, W.O. 56799 | ✓ |
| 1 | CROSSTUBE, W.O. 56800 | ✓ |

10/04/05

**Scope of Services**
*The agreement of Acuren Group Inc. to perform services extends only to those services provided for in writing. Under no circumstances shall such services extend beyond the performance of the requested services. It is expressly un that all descriptions, comments and expressions of opinion reflect the opinions or observations of Acuren Group Inc. based on information and assumptions supplied by the owner/operator and are not intended nor can they be constr representations or warranties. Acuren Group Inc. is not assuming any responsibilities of the owner/operator and the owner/operator retains complete responsibility for the engineering, manufacture, repair and use decisions as a res data or other information provided by Acuren Group Inc. In no event shall Acuren Group Inc.'s liability in respect of the services referred to herein exceed the amount paid for such services.*
**Standard of Care**
*In performing the services provided, Acuren Group Inc. uses the degree, care and skill ordinarily exercised under similar circumstances by others performing such services in the same or similar locality. No other warranty, expresse implied, is made or intended by Acuren Group Inc.*

## SIGNATURES

CLIENT REPRESENTATIVE: Matthew Murdoch (PRINT) — Matthew Murdoch (SIGNATURE)
TECHNICIAN (SIGNATURE): [signature]
NAME (PRINT): MIKE JOHNSON
1ST TECHNICIAN — CGSB LEVEL 2 SNT LEVEL ____ CGSB REG. NO 6666
2ND TECHNICIAN — CGSB LEVEL ____ SNT LEVEL ____ CGSB REG. NO ____

DTR # E-27370
REPORT REVIEWED BY: NAME INITIALS

WHITE – CLIENT COPY CANARY – OFFICE COPY PINK – TECHNICIAN COPY GOLD – OFFICE COPY